LED_MATRIX_DRIVERS

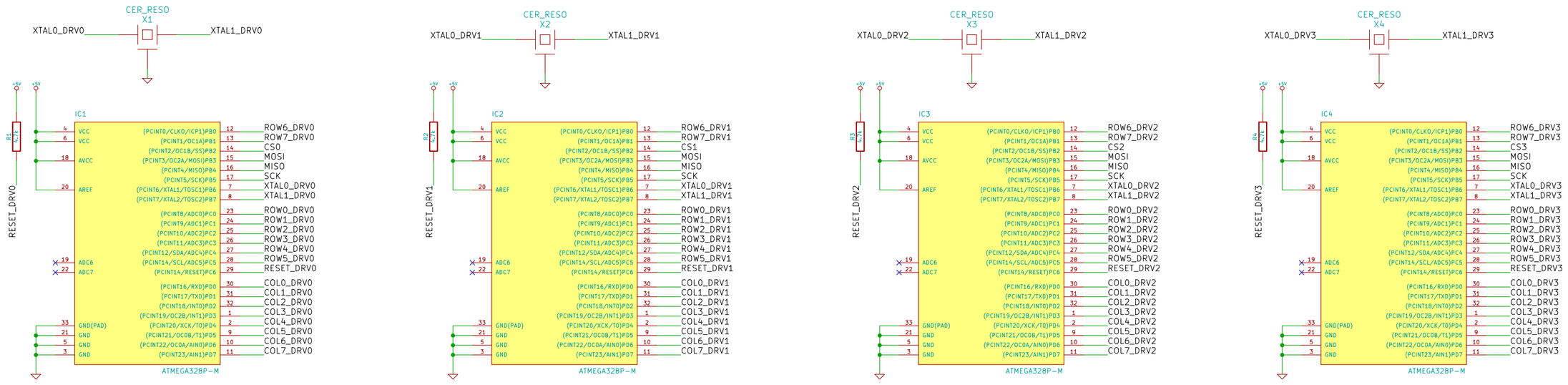

LED Matrices

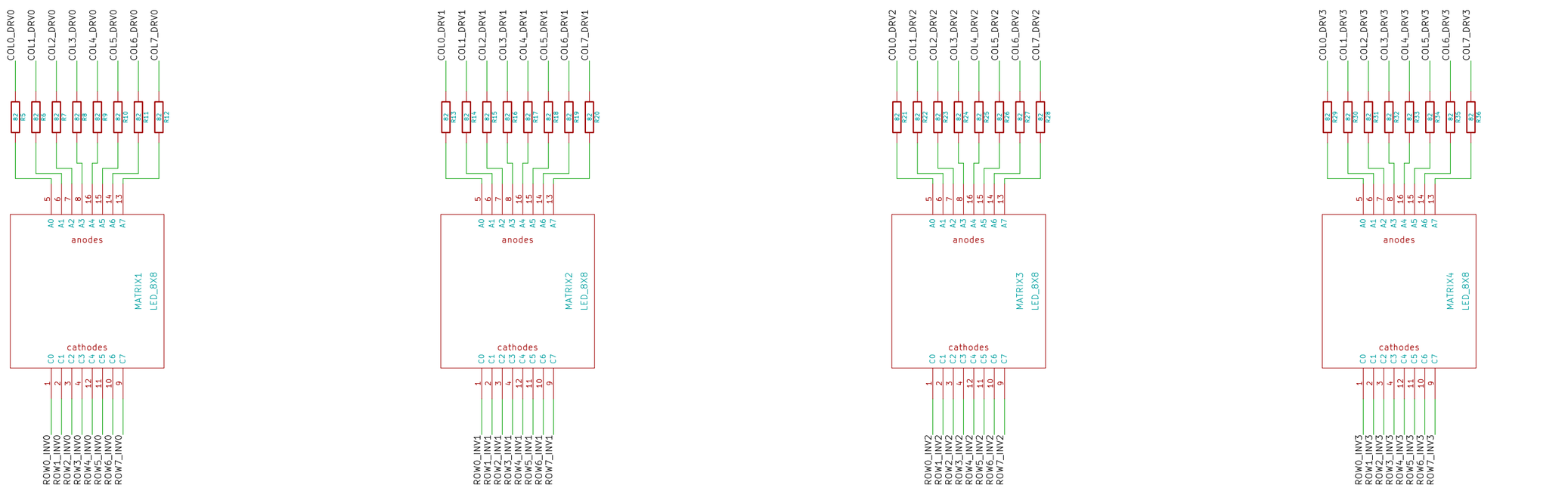

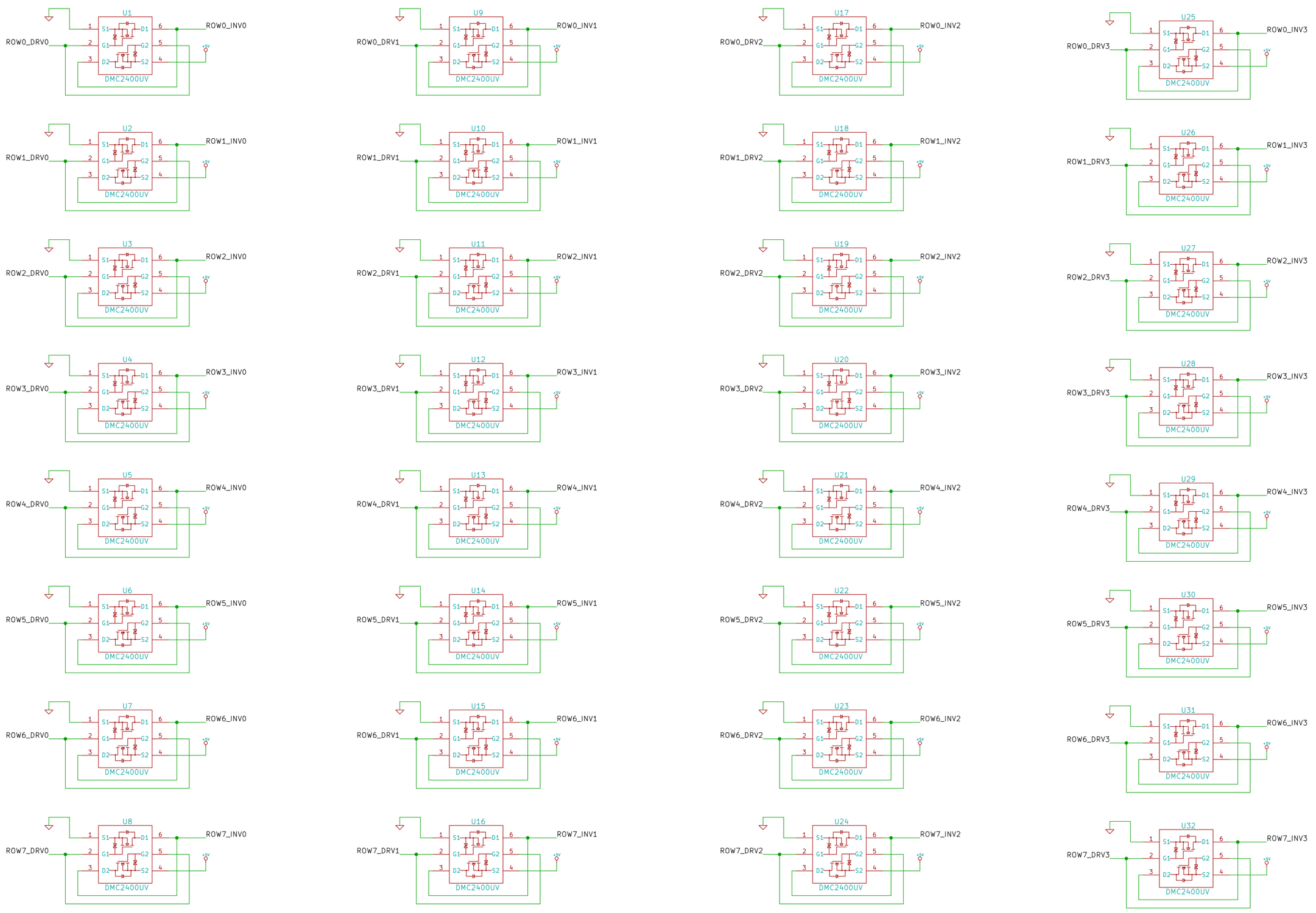

BOARD-TO-BOARD CONNECTORS

POWER FILTERING

File: driver.sch		
Sheet: /		
Title:		
Size: User	Date: 10 aug 2016	Rev:
KiCad E.D.A.		Id: 1/1